YSD-6A
ELECTRIC CONVECTION OVEN
OPERATION MANUAL

Table of Contents

Introduction
Installation
Before Connection
Location
Double Units
Electrical Connection
Door Handle
Water connection
Before Use
Specifications
Operation
Cooking Guide
Cleaning and Maintenance
Trouble Shooting
Circuit Diagram
Parts List

Introduction

We are confident that you will be delighted with your convection oven, and it will become a most valued appliance in your commercial kitchen.

To ensure you obtain the utmost benefit from your new oven, there are two important things you should follow. This range is available in two models: normal type and steaming function model

Firstly

Please read the instruction book carefully and follow the directions given. The time taken will be well spent.

Secondly

If you are unsure of any aspect of the installation, instructions or performance of your oven, contact the local distributor.

Installation

Installation Requirements

It is most important that this oven is installed correctly and that operation is correct before use. Installation shall comply with local electrical, health and safety requirements.

For Model YXD-6AS, please water supply to the unit.

Before Connection to Power Supply

●Remove all packing.
●Check equipment and parts for damage. Report any damage immediately to the carrier and distributor.
●Remove protective plastic coating from the side panels.
●Check that the following parts have been supplied with your oven:
4 x Oven racks
Check that the available power supply is correct to that shown on the rating plate sticked on the appliance.

YSD-6A 220-240V AC 50Hz, 2.85kW

Location

●To ensure correct ventilation for the motor and controls the following minimum installation clearances are to be adhered to:
Top 8” / 200mm
Rear 1” / 25mm
Left-hand side 1” / 25mm
Right-hand side 1” / 25mm
●Position the oven in its working position.
●Use a spirit level to ensure oven is level from side to side and front to back. (If this is not carried out, uneven cooking could occur).
●The unit should be positioned such that the operating panel and oven shelves are easily reachable for loading and unloading.

Important:

THE VENT LOCATED ON THE OVEN TOP MUST NEVER BE OBSTRUCTED.

Double Units

- When it is desired to mount one unit on top of another the 31mm (1¼") high spacer feet must be used. These short feet should be screwed on, and the unit lifted on top of the bottom unit, where it locates safely under its own weight, for normal applications.

Electrical Connection

Ensure unit is fitted with appropriate cord and plug.
To access the electrical connection terminal block, grounding lug (marked with green), and strain relief, remove the back panel (4 screws).

WARNING - THIS APPLIANCE MUST BE GROUNDED

Before Use

- Operate the oven for about 1 hour at 200°C (400°F) to remove any fumes or odour.

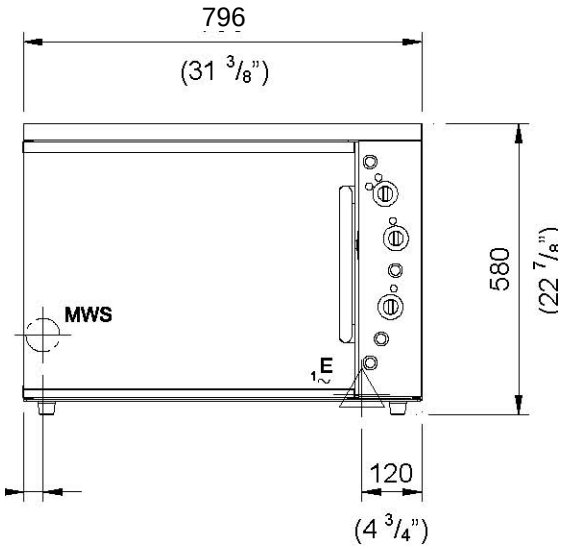

Front

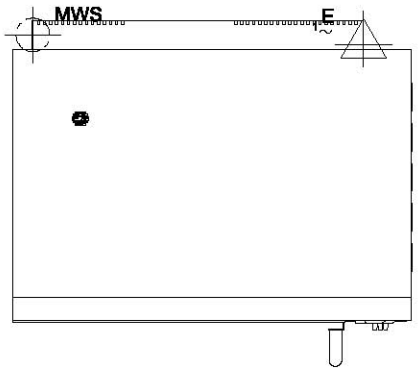

Baking

Control panel

Power switch	Power on/off switch. When power is on, illuminator would be on
Thermostat	Thermostat, 50-250 ℃. Heating elements would cycle on to maintain set temperature. Illuminator would be on while thermostat is working. When thermostat is switched to Grill function, grilling function is working, illuminator is on. When grilling function is working, only top heating element is working
Bake timer	1-Hour bake timer. Illuminator is on while timer is switched on. A buzzer would give a signal when time is up. This timer is totally independent of the oven control
Cook&Hold	Depress switch to activate Roast&Hold function
3-H Timer	When pre-set time is up, oven would hold food warm at a temperature of 90 ℃
Light switch	Chamber light would be on once switch is activated

1. Turn power on

Power switch illuminates when it is depressed and latched in the down position.

2. Set thermostat to desired temperature

The heating indicator light will illuminate whenever the elements are cycling on to maintain the set temperature.

3. Load oven

Once the oven is up to temperature, open the door and load the oven with product. Avoid delays in loading the oven with the door open as this will delay the oven's temperature recovery.

Note:
The oven's fan will switch off and the oven lights will illuminate when the door is opened.

4. Set bake timer to desired time

To set timer, turn knob clockwise to the required time. At any stage, the time can be adjusted in either direction.

For settings less than 10 minutes, first set to greater setting, then turn down to the required time period.

Note:
This 60 minute timer is completely independent of the oven control.

5. Light

To view the product while baking, depress the light switch on the control panel. The light will stay on while the switch is latched in the down position.

6. Time up.

When the timer reaches 0 minutes the buzzer sounds and indicator illuminates. To cancel the buzzer turns the timer to the off position.

7. Unload oven

Open the door and unload the oven.

Note:

The oven's fan will switch off and the oven light will illuminate when the door is opened.

Cook & Hold

CAUTION:

Do not place trays or foil on top of the element cover.

1. Turn power on

Power switch illuminates when it is depressed and latched in the down position.

2. Set thermostat to desired temperature

The heating indicator light will illuminate whenever the elements are cycling on to maintain the set temperature.

3. Load oven

Once the oven is up to temperature, open the door and load the oven with product. Avoid delays in loading the oven with the door open as this will delay the oven's temperature recovery.

Note:

The oven's fan will switch off and the oven lights will illuminate when the door is opened.

4. Set Cook & Hold timer to desired time

This 3 hour timer is electrically driven and is set by turning the timer knob in either direction to the required time. The timer can be set when convenient, but will not start working until the oven control is set and the Roast 'n Hold switch is depressed (switch illuminated)

5. Depress roast switch

Depress the Roast 'n Hold switch. The switch will illuminate and the timer will begin to count down.

6. Light

To view the product while baking, depress the light switch on the control panel. The light will stay on while the switch is latched in the down position.

7. **Hold**

When the timer reaches the hold position, the main oven thermostat is turned off and a pre-set hold thermostat located behind the control panel will control the oven to keep the food warm at serving temperature as long as required until the Roast 'n Hold switch is turned off.

Note:

The hold light will illuminate when the timer reaches hold until the Cook & Hold switch is turned off. The hold light may come on briefly when the Cook & Hold control is first switched on until the oven heats up beyond the pre-set holding temperature.

Grilling / Broiling

1. Grilling / Broiling

Turn thermostat fully clockwise until the GRILL/BROIL position is reached. The GRILL/ BROIL indicator will illuminate indicating that the GRILL/BROIL function has been set. The heating indicator will also illuminate whenever the element is on.

It is recommended that the GRILL/BROIL mode is only used with the oven door open as the oven fan is then automatically off. If however the GRILL/BROIL mode is used with the door closed, the elements will cycle on/off when oven temperature rises above 300°C (570°F) to prevent damage to the oven.

2. Load oven

Place an oven rack normally on the top position. When the element has reached bright red (5 minutes), position the dish under the GRILL/BROIL element. Heat food on one side, then turn on the other side.

It is not recommended to close the door when grilling/broiling.

3. Set bake timer to desired time

To set timer, turn knob clockwise to the required time. At any stage, the time can be adjusted in either direction.

For settings less than 10 minutes, first set to greater setting, then turn down to the required time period.

Note:
This 60 minute timer is completely independent of the oven control.

4. Time up.

When the timer reaches 0 minutes the buzzer sounds and indicator illuminates. To cancel the buzzer turn the timer to the off position.

5. Unload oven

Open the door and unload the oven .

This convection oven will cook a greater quantity of food faster, at a lower temperature and more evenly than an ordinary oven.

When the door is opened the fan will switch off but elements will remain on to provide quick heat recovery. A high powered top element is fitted for toasting or broiling.

FOOD	TEMP °C	TEMP °F	TIME
Sponges	165	330	10-12 mins
Small Cakes	165	330	8-12 mins
Butter Cakes	160	320	35 mins
Fruit Loaf	150	300	40-50 mins
Macaroons	160	320	15-20 mins
Biscuits	140	285	12-20 mins
Shortbread	130	265	15-20 mins
Scones	200	390	10-12 mins

Madeira	165	330	35-50 mins
Bread	175	350	25-35 mins
Plain Fruit Cake	165	330	1-1½ hrs
Rich Fruit Cake	130	265	2-3 hrs
Gingerbread	140	285	35-50 mins
Baked Custard	130	265	50 mins
Souffle	165	330	25 mins
Rice Pudding	130	265	2-3 hrs
Pastry			
Puff	220	430	8-12 mins
Short	175	350	8-12 mins
Flakey	205	400	8-12 mins
Jam	185	365	12-20 mins
Fruit	185	365	35 mins

Roasting

Set the oven temperature to 150-170°C (300°F-340°F). The hot air circulating in the oven reduces moisture loss and shrinkage. Roasting times are reduced by approximately 10 minutes per kg.

MEAT	TIME per kg
Beef - Rare	30-40 min
Beef - Medium	40-50 min
Beef -Well Done	50-60 min
Veal	50-70 min
Lamb	30-40 min
Duck	50 min
Goose	50 min
Turkey	30-40 min
Chicken	
- under 1kg	50-60 min
- over 1kg	40 min

Cook & Hold

This system will automatically cook food for a set time, then hold the oven at a preset temperature indefinitely to maintain food at a serving temperature after cooking has been completed.

When the oven has reached the set temperature, place food in the oven, set roast cooking time and depress the Roast 'n' Hold button. The hold indicator will come on when cooking is complete.

To return to normal operation, push the Roast 'n' Hold switch again (switch will cease illuminating).

Browning

Different foods may be cooked together, eg baking and roasting may be carried out at the same time. Food which requires a slightly higher temperature or more browning should be placed at the top of the oven, so that the broil element may be selected (with the door shut) during the last few minutes of ` cooking. As the top element is quite powerful, keep a close watch on browning progress.

Grilling/Broiling

Turn the oven thermostat right around to GRILL/BROIL. Place an oven rack normally on the second position from the top. Place the food on a grill tray. This allows fat to drain, to prevent smoking. When the element has reached a bright red (5 minutes) position the dish under the GRILL/BROIL element. Heat food on one side, and then turn on the other side.

Toast, sandwiches etc., on a scone tray on the top rack position.

It is not recommended to close the door when grilling/broiling.

Cleaning Guidelines

Caution:

ALWAYS TURN OFF THE POWER SUPPLY BEFORE CLEANING AND PULL OFF THE PLUG.

THIS UNIT IS NOT WATER PROOF.

DO NOT USE WATER JET SPRAY TO CLEAN INTERIOR OR EXTERIOR OF THIS UNIT.

Exterior

Clean with a good quality stainless steel cleaning compound. Harsh abrasive cleaners may damage the surface.

Interior

Ensure that the oven chamber is cool. Do not use wire brushes, steel wool or other abrasive materials. Clean the oven regularly with a good quality oven cleaner. Take care not to damage the fan or the tube at the right side of the oven which controls the thermostat.

Oven Racks

To remove, slide out to the stop position, raise the front edge up, and lift out. Different type of food trays can be placed on oven racks.

Side Racks

Undo the thumbscrew (anti-clockwise rotation) securing rack to oven wall, swing rack towards centre of oven to disengage location pin at front of side, and pull rack forward to remove. To replace, engage rack in rear holes, swing towards side of oven to engage in front hole, and replace thumbscrew.

Bottom Element Cover

Lift out element cover and thoroughly clean on a routine basis (minimum once per week.)

Fan Baffle

To remove, unscrew the oven lamp glass and lift the baffle out. To replace, locate the bottom edge of the baffle over the bottom element terminal plate and secure in place with the oven lamp glass.

Do not over tighten lamp glass.

Oven Seals

To remove, hold at their center point and pull forward until they unclip. Remove side seals first, then top and bottom. The seals may be washed in the sink, but take care not to cut or damage them.

To replace, have the lip facing the oven opening. Fit the top and bottom seals first, then the side seals.

Oven Door Glass

Clean with conventional glass cleaners

Oven trouble-shooting Baking trouble-shooting

Fault	Possible Cause	Remedy
The oven does not operate / start.	The mains isolating switch on the wall, circuit breaker or fuses are "off" at the power board. The power switch on the oven is off.	Turn on. Depress switch. Switch will illuminate.
Bake timer does not time down.	Bake timer not set correctly.	For settings less than 10 minutes, first set to greater setting then turn back to desired setting.
Cook timer does not time down	Cook & Hold button not depressed.	Depress Roast 'n' Hold button. (Roast timer only operates when Roast function is selected).
Oven light not illuminating.	Blown bulb.	Replace bulb.

Moist sticky crust	Too much sugar.
Hump or cracks on top	Too much flour. Oven too hot.
Heavy compact textures	Too much shortening. Too much sugar. Oven not hot enough. Over beating.
Undersized cake	Too large a pan. Oven too hot. Not enough baking powder.
Uncooked streak at bottom	Under mixing of ingredients. Oven not hot enough. Too much liquid.
Cake falling	Too much baking powder. Too much shortening. Too much sugar. Oven not hot enough. Insufficient baking. Moving cake during baking.
Mixture running over pan	Pan too small. Oven not hot enough. Too much sugar or shortening. Too much baking powder.

Dry cake	Too much flour. Not enough sugar or shortening. Too much baking powder. Over beaten egg white. Over baking at too low a temperature.
Coarse Texture	Too much baking powder. Not enough liquid. Oven not hot enough. Insufficient creaming of shortening and sugar.
Uneven cooking	Too high a temperature selected. Oven or racks not level. Insufficient air space around trays or baking tins. Opening oven door unnecessarily. Faulty thermostat, oven door seal or restricted oven venting.
Smoking or discoloration around door	Oven too hot. Food spillovers not cleaned up. Faulty oven door seal.

Circuit diagram

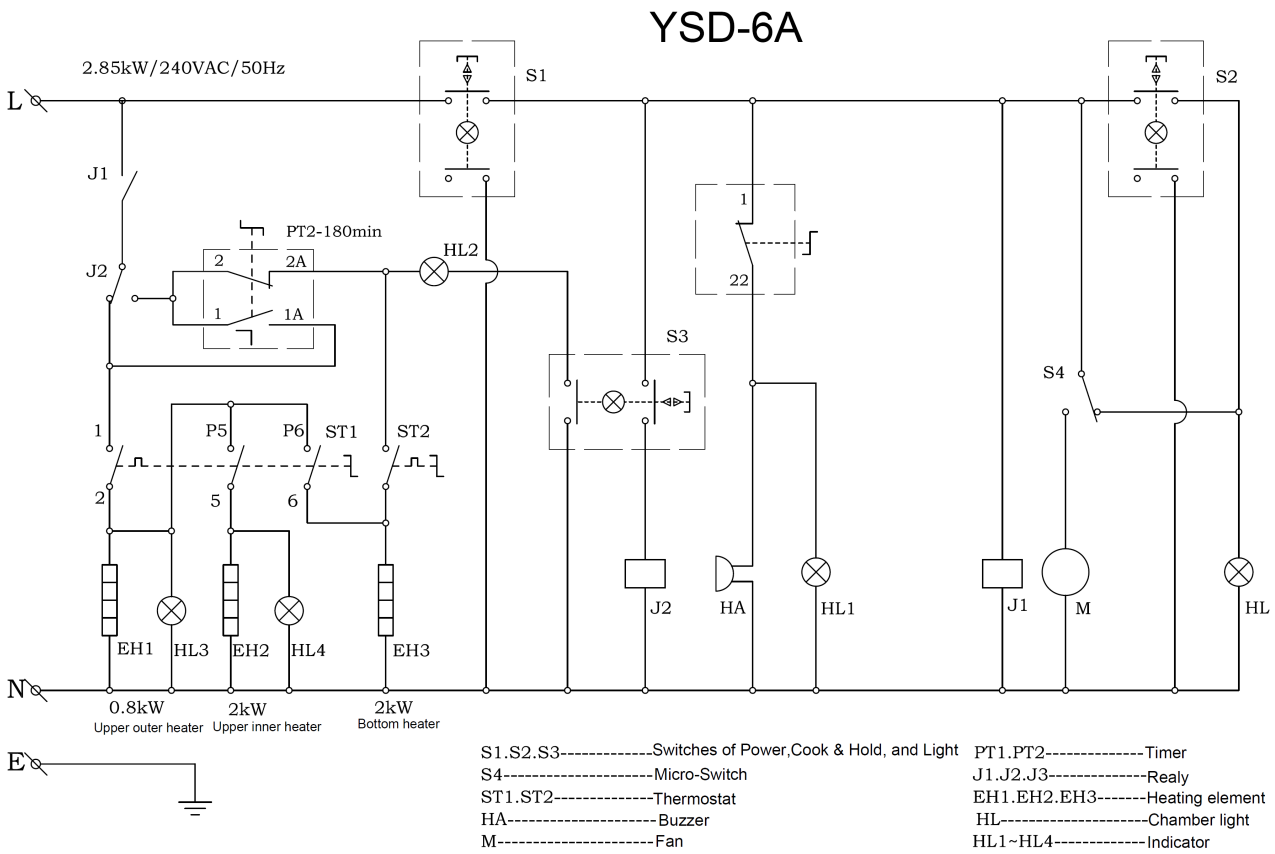

Daily checking
Check the appliance before and after use. Before using, make sure the appliance dose not lean. Be certain that the power cord is not worn out or broken. When in use, make sure no unpleasant smell is present and there is no any unusual noise.

This manual must be read and understood by all persons using or installing this appliance. Contact your local dealer if you have any questions concerning installation, operation or maintenance of this equipment.

IMPORTANT: DO NOT DISCARD THIS MANUAL

This manual is considered to be part of the appliance and is to be given to the owner or manager of the hotel or restaurant, or to the person responsible for training operators of this appliance. It should be retained for future reference. Additional manuals are available from your local dealer.